CORPS + ET (AH)

81-7-1114

Poids (g)	50 g

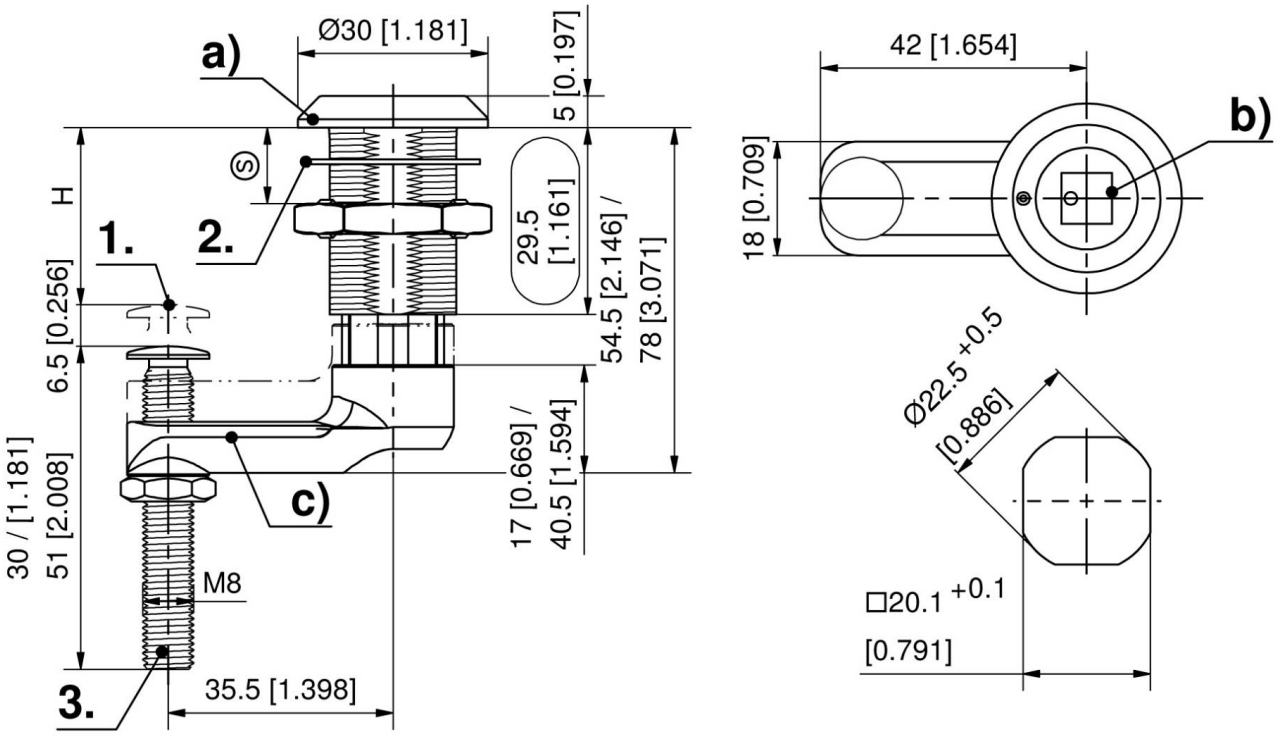
a)
Ø30 [1.181]
5 [0.197]
42 [1.654]
b)
18 [0.709]
H
S
1.
2.
29.5
[1.161]
54.5 [2.146] /
78 [3.071]
6.5 [0.256]
30 / [1.181]
51 [2.008]
c)
17 [0.669] /
40.5 [1.594]
M8
3.
35.5 [1.398]
Ø22.5 +0.5
[0.886]
□20.1 +0.1
[0.791]