# SERR. CLE 2233X CLIP H 13.5

**81-7-8502**

| | |
|---|---|
| **Poids (g)** | 43 g |

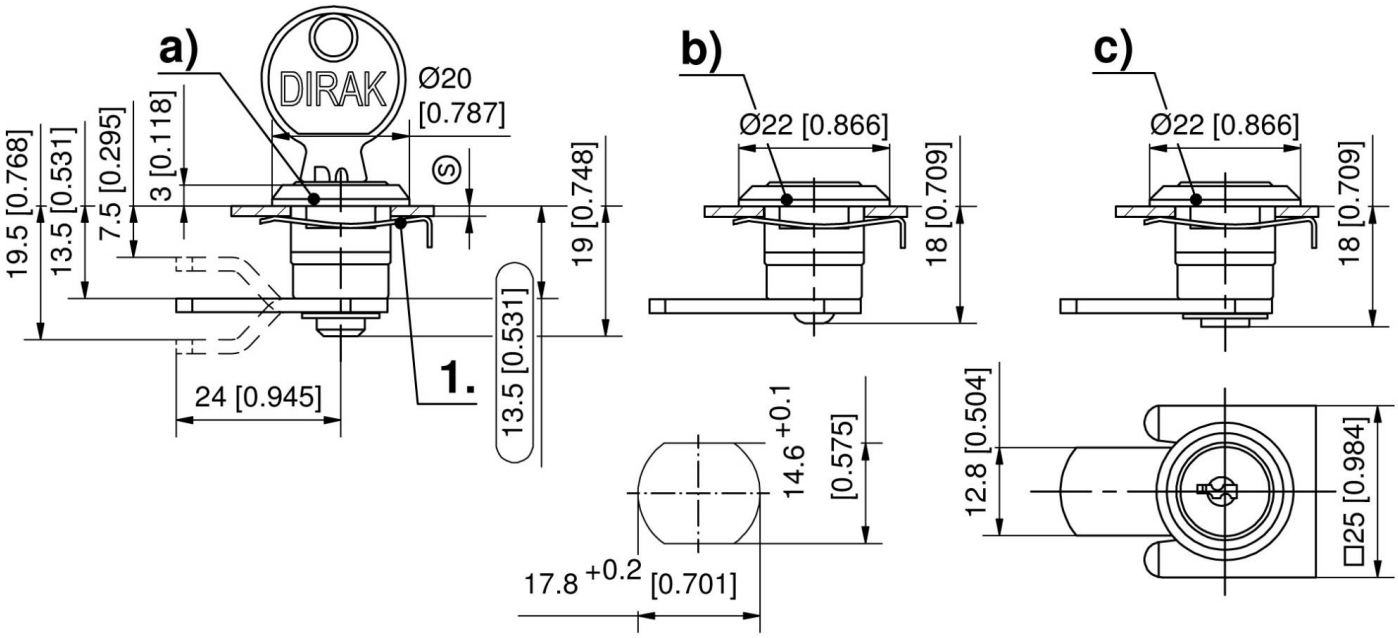
a)
b)
c)
DIRAK
Ø20
[0.787]
Ø22 [0.866]
Ø22 [0.866]
19.5 [0.768]
13.5 [0.531]
7.5 [0.295]
3 [0.118]
19 [0.748]
18 [0.709]
18 [0.709]
13.5 [0.531]
24 [0.945]
1.
14.6 +0.1
[0.575]
17.8 +0.2
[0.701]
12.8 [0.504]
□25 [0.984]