# ENTREE SERRURE (A)

**81-7-5138**

| | |
|---|---|
| **Poids (g)** | 16 g |

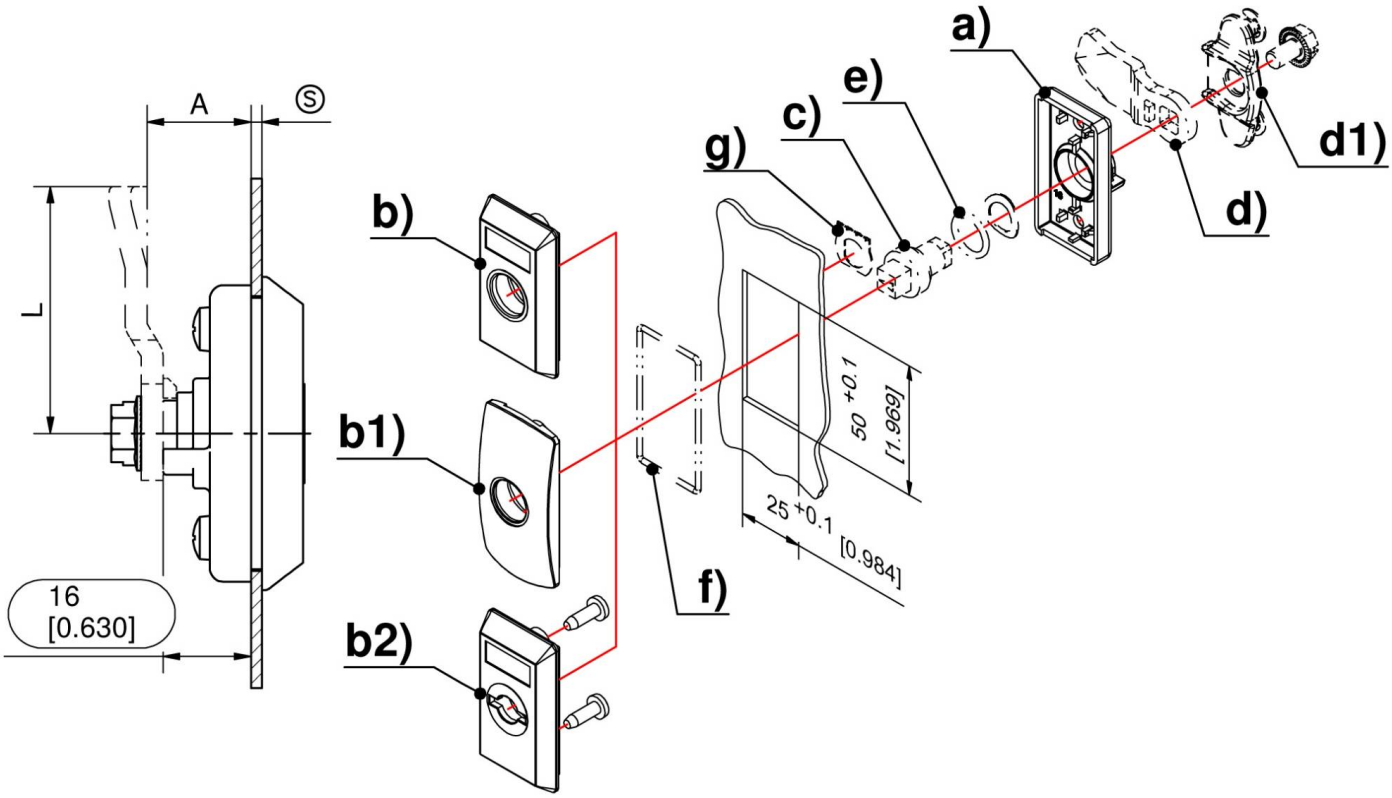
A
S
L
16
[0.630]
b)
b1)
b2)
g)
c)
e)
a)
d1)
d)
f)
50 +0.1
[1.969]
25 +0.1
[0.984]