CHARNIERE 60X76 CHROME 4 X TF6

85-7-1205

Poids (g)	205 g

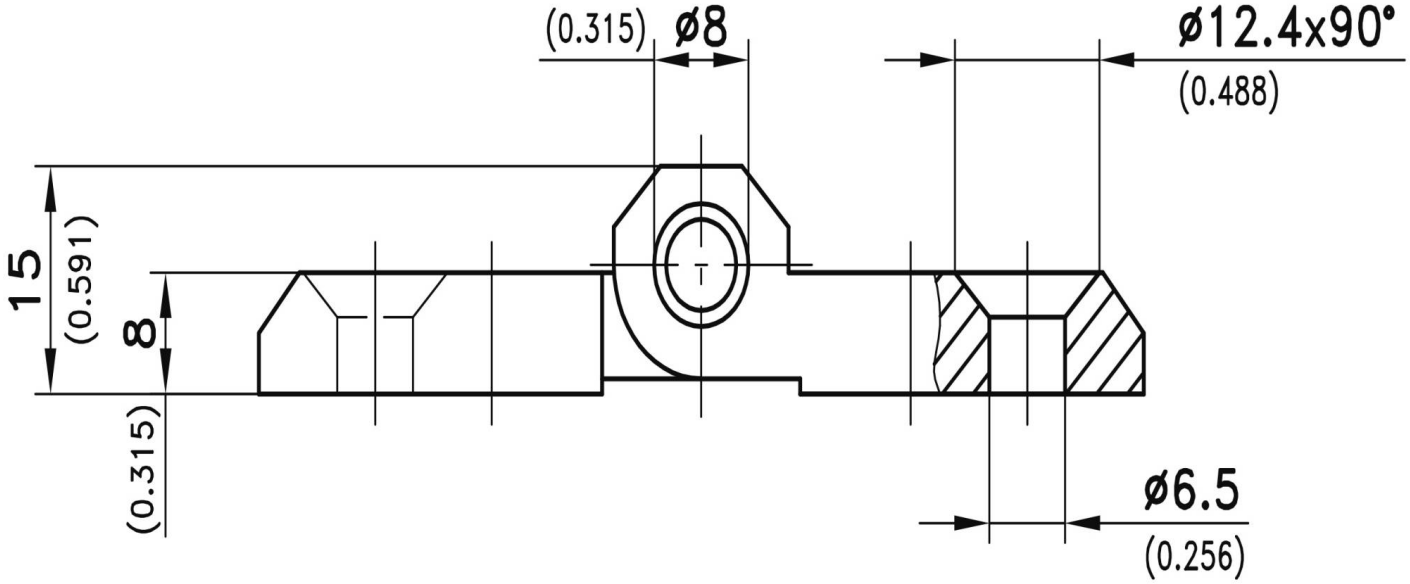
(0.315)
ø8
ø12.4x90°
(0.488)
15
(0.591)
8
(0.315)
ø6.5
(0.256)

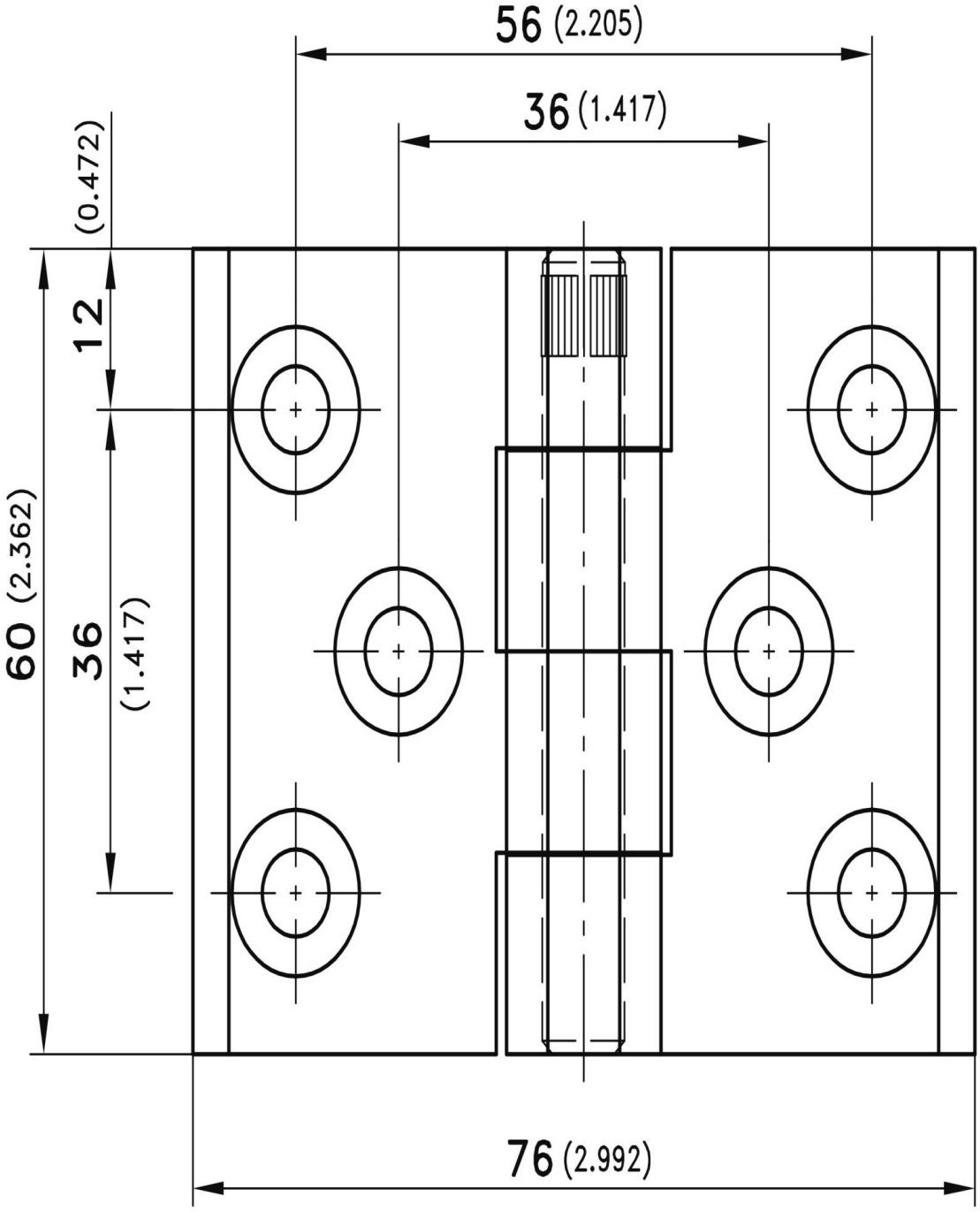
56 (2.205)
36 (1.417)
(0.472)
12
60 (2.362)
36
(1.417)
76 (2.992)