LEVIER DH / GB + CROCHET

87-7-2003

Poids (g)	710 g

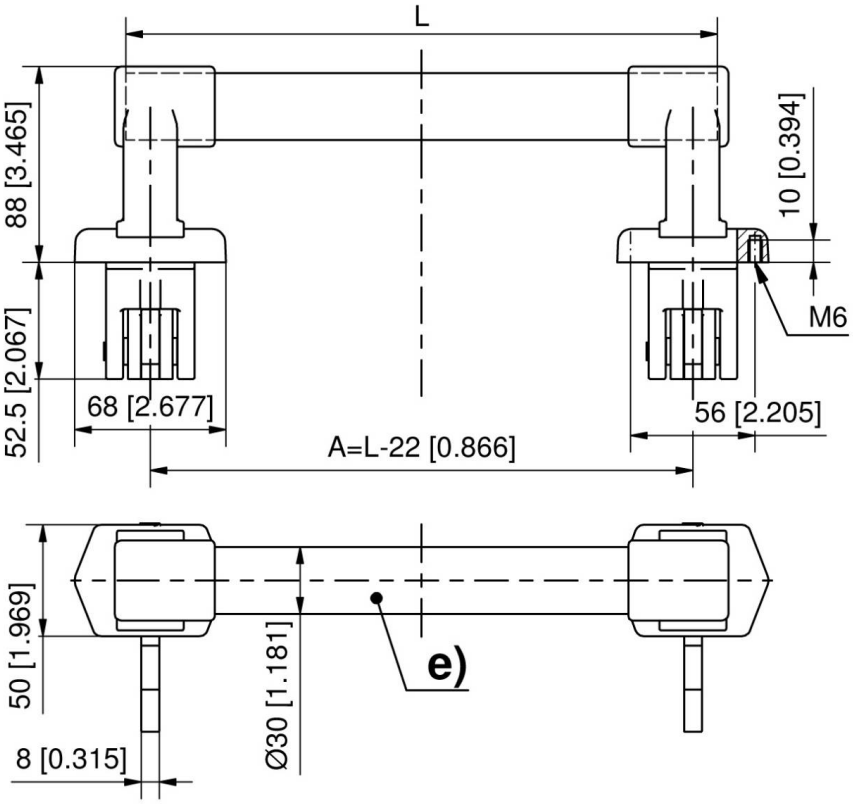
L
88 [3.465]
10 [0.394]
M6
52.5 [2.067]
68 [2.677]
56 [2.205]
A=L-22 [0.866]
50 [1.969]
Ø30 [1.181]
e)
8 [0.315]

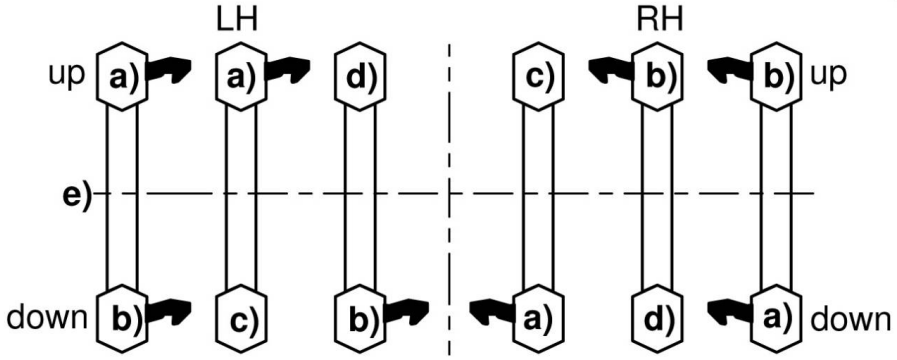
LH
RH
up
a)
a)
d)
c)
b)
b)
up
e)
down
b)
c)
b)
a)
d)
a)
down

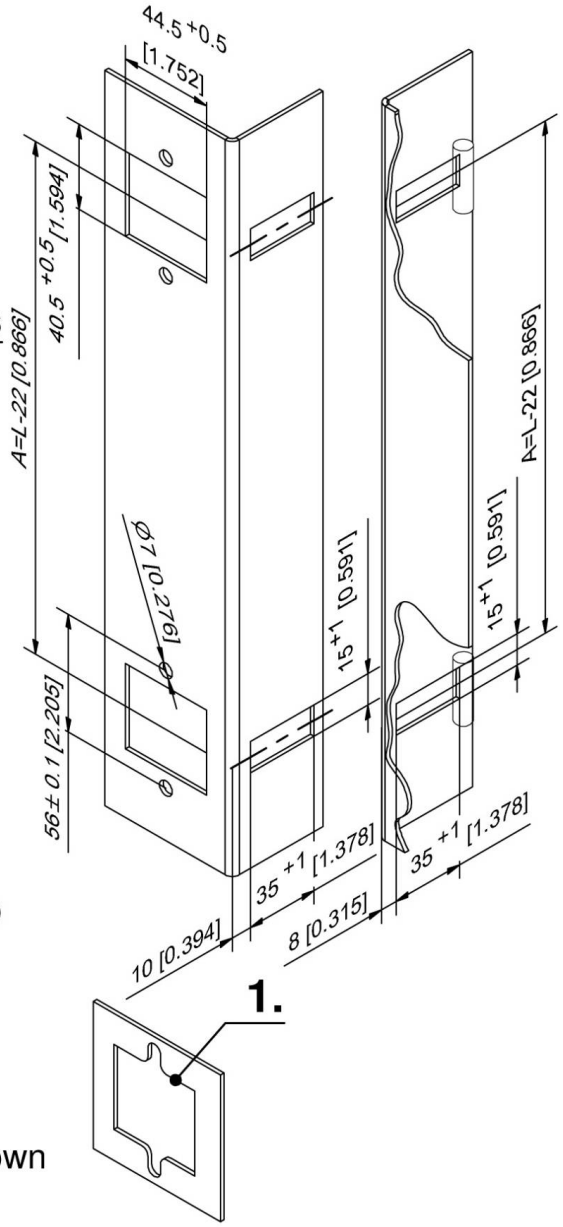
44.5 +0.5
[1.752]
40.5 +0.5 [1.594]
A=L-22 [0.866]
Ø7 [0.276]
15 +1 [0.591]
56± 0.1 [2.205]
35 +1 [1.378]
10 [0.394]
8 [0.315]
A=L-22 [0.866]
15 +1 [0.591]
35 +1 [1.378]
1.